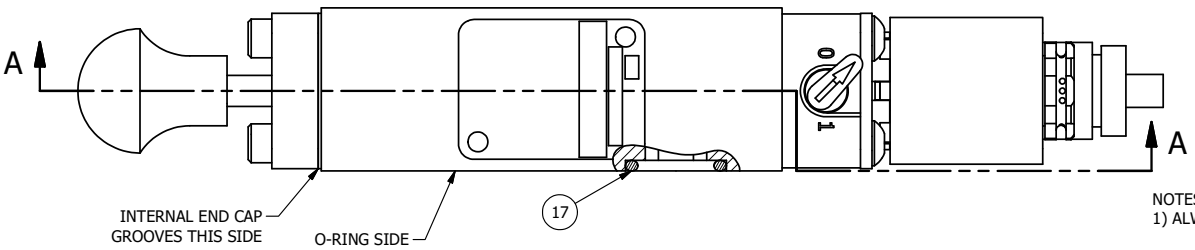

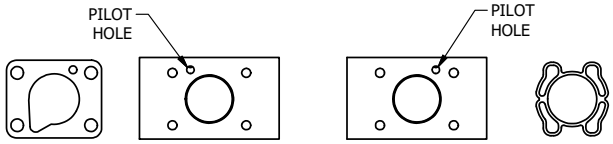

POSITION GASKET ON END OF VALVE TO SEAL PILOT HOLE SIDE 'B' ONLY

ALIGN PILOT AND SLOT IN ADAPTOR WITH GASKET IN BETWEEN SIDE 'A' ONLY FOR EXTERNAL PILOT OPERATION - ROTATE ADAPTOR 180 DEGREES. REMOVE 1/8" NPTF PLUG AND SUPPLY 50-150 PSI TO 1/8" NPTF PILOT PORT IN ADAPTOR.

NOTES:
1) ALWAYS GIVE VALVE MODEL AND PART NUMBER WHEN ORDERING PARTS.

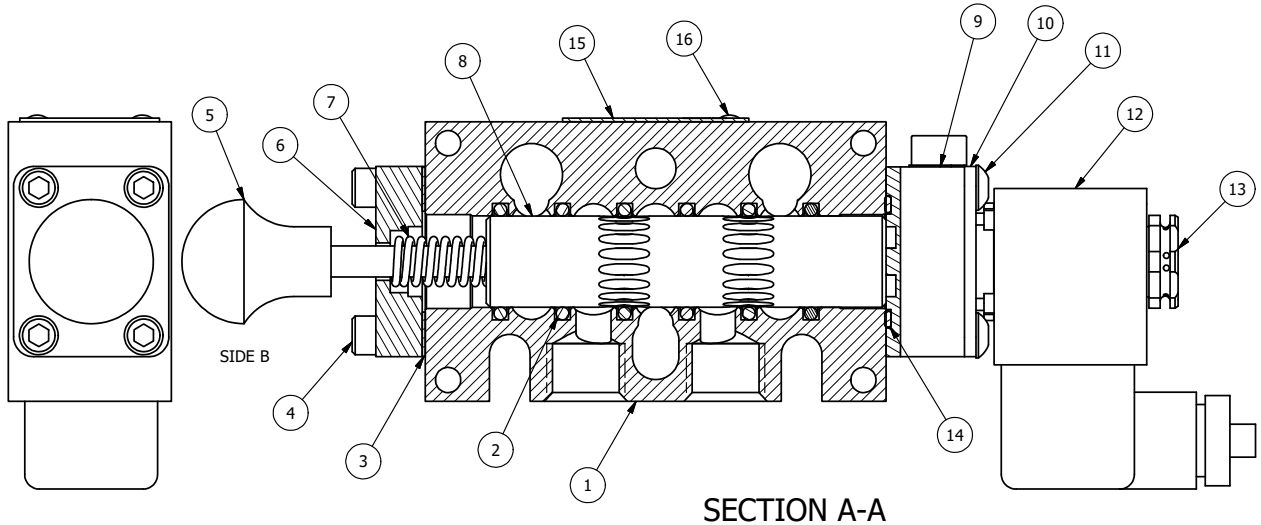

SECTION A-A
SCALE 1 : 1

FLG	QTY	PART NO	DESCRIPTION
17	3	V-110	O-RING, BUNA-N, 70 DURO, AS-114, (REF 5/8 X 13/16 X 3/32), 1/4" SLEEVE, 1/2" SUB, STACK
16	2	V-212	SCREW, #2 X 3/16 DRIVE, TYPE U, OVAL HEAD, STAINLESS STEEL
15	1	AN-114	NAMEPLATE, BLANK, FOR VALVES WITH SPRINGS OR DETENTS
14	1	EMG3	GASKET - END MOUNT SOLENOID, BUNA-N, 1/4" & 3/8" VALVES
13	1	V-562	NUT, SOLENOID, SIDE EXHAUST
12	1	V-612-3	ATEX COIL 24 VDC WITH 3 METER CORD. NASS # 1215 30.1-001/6896.
11	4	V-584	SCREW, 10-24 X 1, BUTTON HEAD SOCKET CAP WITH MICROSPHERE APPLIED TO THREADS.
10	1	SEC3-7	PLATE, RE-INFORCEMENT, SOLENOID, STAMPED, 304 STAINLESS
9	1	V-599-1	SOL OPER, END MOUNT, LOCKING O'RIDE
8	1	AY-S3-SIK	ASSEMBLY - SPOOL INDICATOR, THREADED, 1/4" & 3/8" VALVE
7	1	CS3	SPRING - RETURN, (EXCEPT HO, KO & PO) 1/4" & 3/8" VALVES
6	1	PEC3-5	END CAP, INDICATOR PIN, WIPER CAVITY, 6061-T6, 1/4" & 3/8" VALVE
5	1	V-570	KNOB,BLACK (BRASS 1/4-20 INSERT), OS OPTION
4	4	V-38	SCREW, 10-24 X 3/4, SOCKET HEAD CAP
3	1	ECG3	GASKET - END CAP, 1/4" & 3/8" VALVE
2	6	V-39	O-RING, VITON, STD BODY, 1/4" & 3/8" VALVES
1	1	B3-10E	FINISHED - SOLID BODY, UPPER PILOTS, 3/8" STACKING VALVE

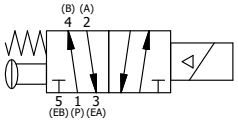

LIMITS ON DIMENSIONS UNLESS OTHERWISE SPECIFIED
2-PL DECIMAL ± .01
3-PL DECIMAL ± .005
FRACTIONAL ± 1/64
ANGULAR ± 1/2'

AAA PRODUCTS INTERNATIONAL
7114 Harry Hines Blvd
Dallas, TX 75235

DRAWN: RMcKenna	DATE: 3/23/2020	CHECKED: KWaite	DATE: 3/23/2020
SCALE: 1 : 1	SHEET: 1 OF 1	RELEASED: HWomack	DATE: 3/23/2020

TITLE: 3/8" STACK, SNGL SOL, 2 POS, SPR RTRN, ATEX, 24VDC, LCKNG OVRD, SIDE VENT, THD PIN

PART NO.: EBSO3TOCOS 24VDC

REV.:

THE INFORMATION CONTAINED WITHIN THIS DOCUMENT IS PROPRIETARY TO AAA PRODUCTS AND MAY NOT BE DISCLOSED WITHOUT PRIOR WRITTEN CONSENT

D:\Engineering\Product\Valve\Assembly\Standard\SOV\DWG\EBSO3TOCOS 24VDC.dw